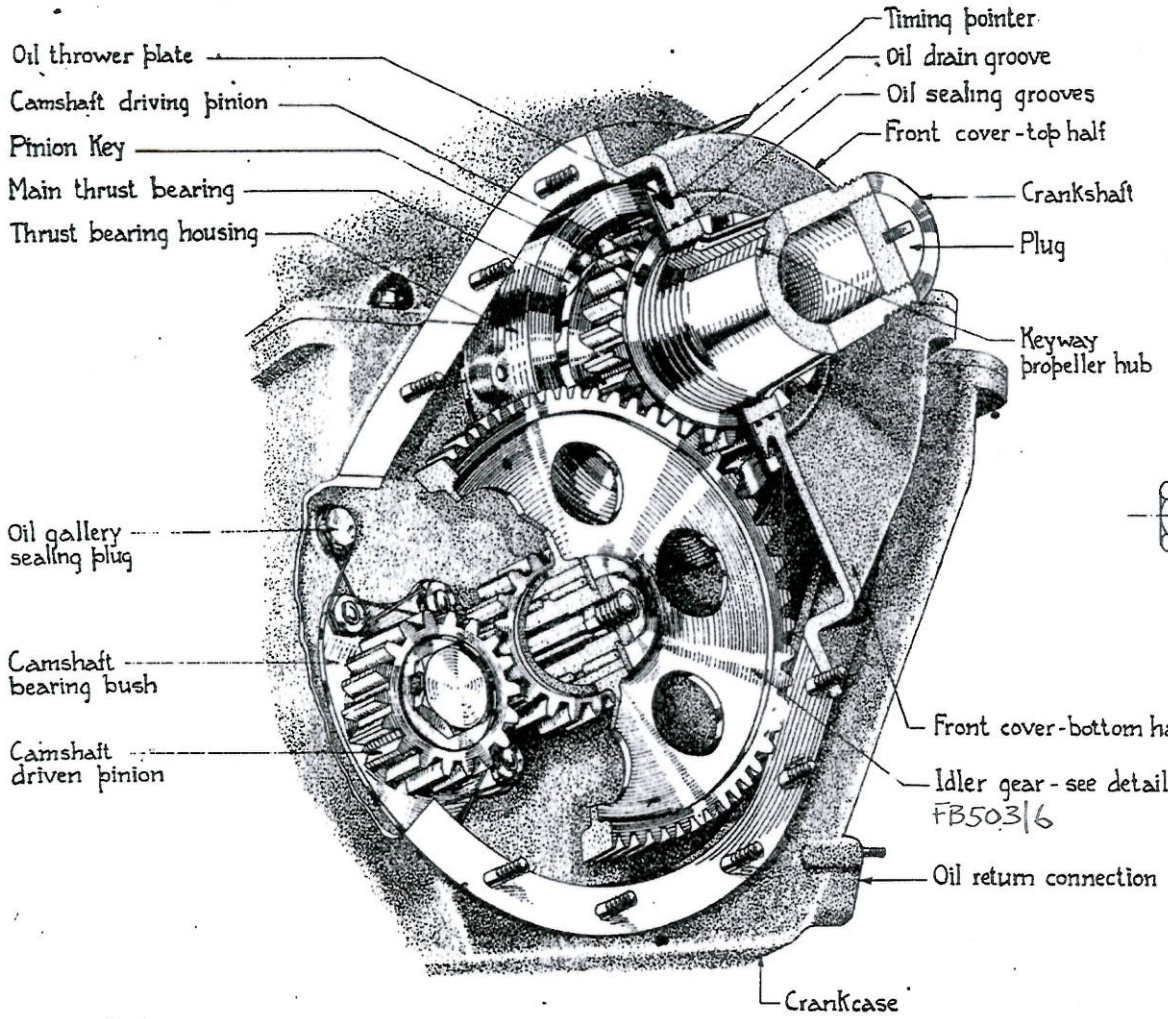

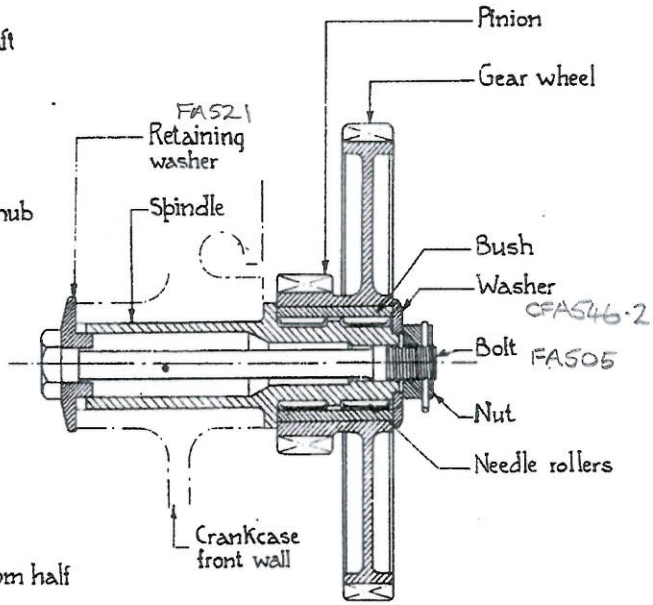

Section through Idler Gear

FIG. 13

CAMSHAFT DRIVE

A.231

FIG. 13

PP1947 M23198/694 12/42 950 C & P Gp. 959 (4)

the crankshaft and a smaller pinion which engages with the camshaft pinion. The crankshaft pinion is secured to the shaft by a keyway and a cylindrical nut, the outer face of which is serrated to accommodate a spanner. The gearing is enclosed within a housing which is cast integral with the crankcase and enclosed by the front cover plate. The cover plate boss, through which the crankshaft passes, is a close fit on to the cylindrical nut and is grooved to prevent leakage of oil; this is further prevented by an oil thrower plate clamped between the pinion retaining nut and pinion.

Magneto drives

General

35. The two magnetos at the rear end of the engine are actuated by vertical spindles driven by a skew gear on the rear end of the crankshaft. The upper end of each spindle is provided with a coupling for driving the r.p.m. indicator cable, whilst a cam at the lower end of each spindle operates the push rod which actuates the fuel pump. The attachment of the skew gear to the crankshaft is described in para. 28 of this Chapter.

Vertical drive spindles

36. The two spindles are installed one on each side of the longitudinal centre line of the engine (*see* fig. 19 of this Chapter), and each spindle is supported by two ball bearings carried in housings cast integral with the crankcase as described in para. 22 of this Chapter. Each spindle is of steel and is hollow from the lower end up to the keyway for the skew gear at the upper end. Immediately above the lower bearing, the spindle is machined to form a cam for operating the fuel pump tappet. The skew gear is attached to the spindle by a key and nut, and a vernier type coupling for the magneto at the lower end is similarly attached, the skew gear nut being locked by a tabwasher and the coupling nut by a circlip. The ball bearing at the upper end is carried in a bush in the crankcase casting, whilst the inner race of the bearing is secured to the spindle by the clamping action of the skew gear retaining nut against a small collar on the spindle. The lower ball bearing is carried in a flanged steel housing which is secured to the crankcase by countersunk-headed screws which also retain a housing for the Gits type oil seal (*see* para. 37 of this Chapter). The inner race of the bearing is secured to the spindle by the clamping action of the vernier coupling retaining nut against the fuel pump driving cam, an oil thrower ring being interposed between the inner race and the cam. The upper end of each spindle is provided with a slot for driving the r.p.m. indicator cable through an adapter, the adapter being fitted, however, to one spindle only, the aperture above the remaining spindle being closed by a blank flange. The gearing and bearings are lubricated by splashed oil. The oil throwers on the magneto driving shafts *are not interchangeable* and are stamped "L.H." and "R.H." as viewed from the rear of the engine with the cylinders below the crankshaft. It will be seen that the throwers throw oil "off" the shafts when in their correct position. The clearance between the oil thrower and ball race housing is important and should be maintained (min. 0·003 in., max. 0·008 in.) otherwise the effectiveness of the oil thrower suffers.

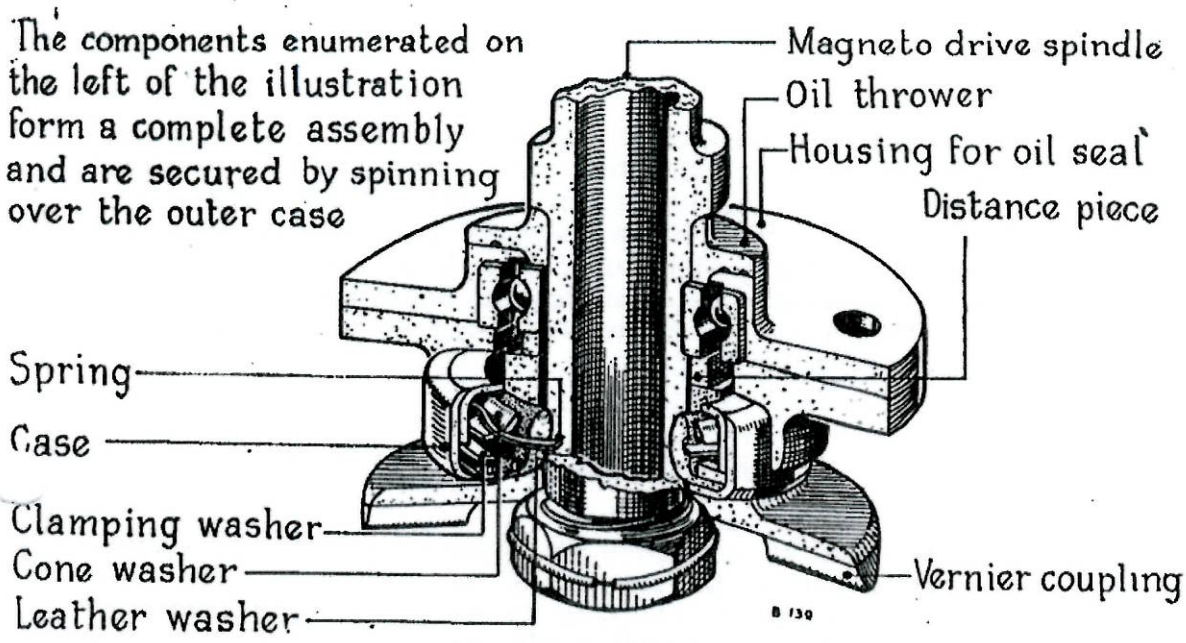

FIG. 14.—OIL SEAL

Oil seal

37. The Gits type oil seal (*see* fig. 14 of this Chapter) is a complete assembly pressed into the flanged housing defined in the previous paragraph. The seal comprises the case, the leather sealing washer, the clamping washer, the cone washer and the waved spring washer. The leather washer is clamped in position by the inner member of the case and the clamping washer, whilst the cone washer, under the influence of the spring, forces the tapered edge of the leather washer against the boss of the vernier coupling to form an oil seal. When assembling the Gits seal and housing care must be taken to see that the distance piece (*see* fig. 14 of this Chapter) is in position before the housing is fitted, as this prevents the vernier coupling crushing the Gits seal.

Auxiliary drives

General

38. The auxiliaries driven by the engine comprise the fuel pumps, oil pump, and r.p.m. indicator (*see* figs. 17, 18 and 19 of this Chapter).

Fuel pump drives

39. As described in para. 22 of this Chapter, the rear end of the crankcase is provided with a facing at each side for mounting the auxiliary pumps. Interposed between the pump flange and the crankcase face is a cover plate which carries a long boss slightly below its centre. This boss supports a spring-loaded tappet, the head of which makes contact with the cam on the magneto driving spindle, the opposite end bearing against the rocker of the fuel pump. The tappet is lubricated by splashed oil through an oil hole in the upper face of the boss.

Oil pump drive

40. The oil pump is mounted on a face of the crankcase rear wall as described in para. 22 of this Chapter. The square shank of the socket at the rear end of the camshaft (*see* para. 33 of this Chapter) is connected to the square spindle on the pump rotor by a floating hollow square coupling.

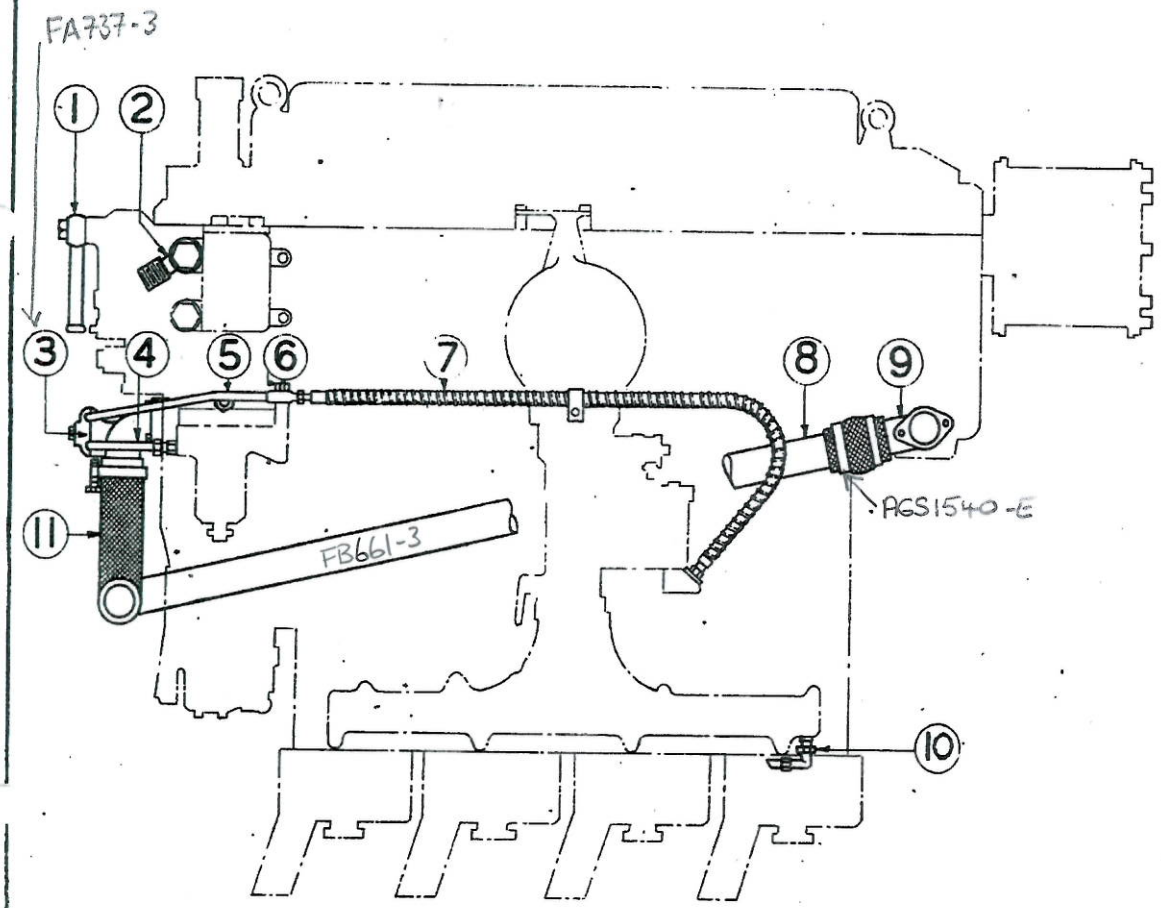

Starboard view

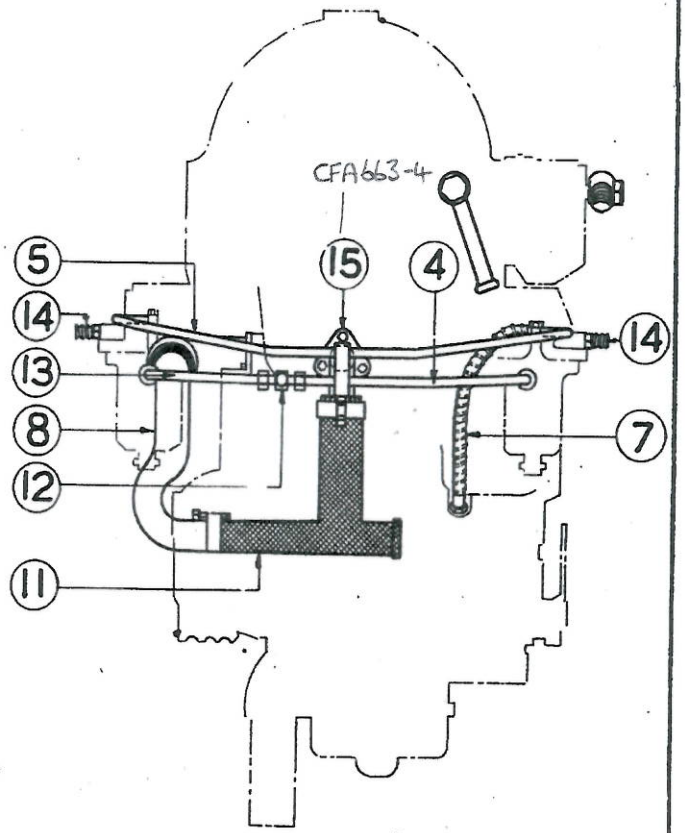

Rear view

FIG. 15

FUEL AND OIL PIPES

FIG. 15

A.233

PP1947 M2319B/694 12/42 250 C&P Gp. 959 (4)

R.P.M. indicator drive adapter

41. The adapter for the r.p.m. indicator drive comprises a flanged housing and a coupling spindle (*see* fig. 19 of this Chapter). The duralumin housing is provided with a flange, by which it is secured to the crankcase cover, and has an external thread for the attachment of the drive cable casing. The steel spindle is provided with a tongue at the lower end which engages with the slot in the end of the magneto drive spindle, whilst the upper end of the adapter spindle has a hole with a keyway to accommodate the end socket of the drive cable. As stated in para. 36 of this Chapter, the adapter is fitted to one magneto drive spindle only.

Fuel pumps

42. The Amal fuel pumps, one of which is installed on each side of the crankcase, are operated by a cam on the magneto driving spindle as described in para. 39 of this Chapter. A description of the pumps is given in the relevant Section of A.P.2241, Vol. I.

Piping systems

General

43. The fuel and oil piping systems, described in the following paragraphs and illustrated in fig. 15 of this Chapter, comprise the external pipes and pipe fittings supplied with the engine.

Oil pipes

44. The oil pipes comprise the following:—

(i) A banjo union (1) is fitted to the suction filter at the rear of the engine and forms the means of connecting the oil supply pipe from the tank to the engine.

(ii) At the front of the engine an elbow (9) is fitted on the port side to which the large bore drain pipe (8) is connected.

(iii) At the rear of the engine the elbow (15) is provided for attaching a large bore moulded rubber T-piece (11), one branch of which is connected to the drain pipe (8), while the remaining branch is for connecting the oil return pipe from the engine to the tank.

(iv) Union (2) is provided at the side of the oil pressure filter for connecting the pipe from the pressure gauge.

Fuel pipes

45. The fuel pipes comprise the following:—

(i) Two small bore pipes (4) at the rear of the engine connect the suction union of each pump to the T-piece (12), the remaining branch of the T-piece is for connecting the fuel supply pipe from the tank.

(ii) The third small bore pipe (5) interconnects the delivery union of each pump, these two sets of pipes being secured to the elbow (15) by the clamp (3).

(iii) The delivery union on the starboard fuel pump is provided with a double-ended banjo, to one end of which the fuel pipe (5) is connected whilst the remaining end is connected to the carburettor by the flexible fuel pipe (7).

(iv) The banjo union bolt on the starboard pump is provided with a union (6) for connecting the pipe from the fuel pressure gauge.

(v) On each pump, a union (14) is provided for connecting the diaphragm vent and drain pipes; these pipes are not supplied with the engine.

(vi) The forward end of the induction manifold is provided with an elbow and union (10) for connecting the pipe from the priming pump.

Cooling baffles

46. The engine is cooled by air from the slipstream which enters the open front end of a scoop fitted along the port side of the cylinders (*see* fig. 16 of this Chapter). The front end of the scoop aligns with an aperture in the engine cowling and the rear end is closed by a baffle plate. On the starboard side the inter-cylinder gaps are closed by a single baffle plate which is provided with three louvres for the exit of the heated air.

47. The scoop is built up with light-alloy plate and is reinforced internally by angle stiffeners. The lower portion of the scoop carries a box which houses the screened ignition harness leads, moulded rubber grummets being fitted in the lower face of the box to protect the leads. The outer face of the box is detachable to give access to the sparking plugs, and is secured to the box by draw wires (*see* note in fig. 16 of this Chapter in connection with Auster I aircraft). The upper and lower edges of the scoop are attached to the engine by hinge type lugs and draw wires. The lugs on the upper edge engage with similar lugs on a strip secured to the crankcase, whilst the lower ones engage with lugs cast integral with the cylinder head. The spaces between the exhaust ports are sealed by a continuous steel strip which is fitted over the exhaust port faces and secured in position when the exhaust system is assembled.

48. The air scoop end-baffle is of light-alloy plate which is dished at the upper edge to clear the magneto. The baffle fits inside the rear stiffener of the scoop and is attached at its upper edge by means of a spring clip at the cylinder base whilst the lower edge is bolted to the end of the steel sealing strip along the exhaust ports.

49. The baffle on the starboard side is built up with a single piece of light-alloy plate flanged over on the lower edge to form four lugs for the attachment of the baffle. Each lug is provided with two slotted holes which permit the baffle to be passed over 2 B.A. studs in the cylinder head to which it is secured by nuts and spring washers. The upper edge of the baffle is retained in position by spring clips attached to studs in the cylinder face of the crankcase. The baffle is provided with three forward-facing louvres inset into the gaps between the cylinders; this arrangement ensures that the cooling air flow is circulated as close to and as far round each cylinder as possible before escaping.

Exhaust system

50. The engine can be fitted with either an exhaust manifold or exhaust stub pipes, loose flanges being provided with the engine for the purpose of constructing the exhaust system to suit the airframe requirements. As described in para. 47 of this Chapter, a continuous steel sealing strip is fitted over the exhaust port faces and copper asbestos washers are fitted between the cylinder face and strip.

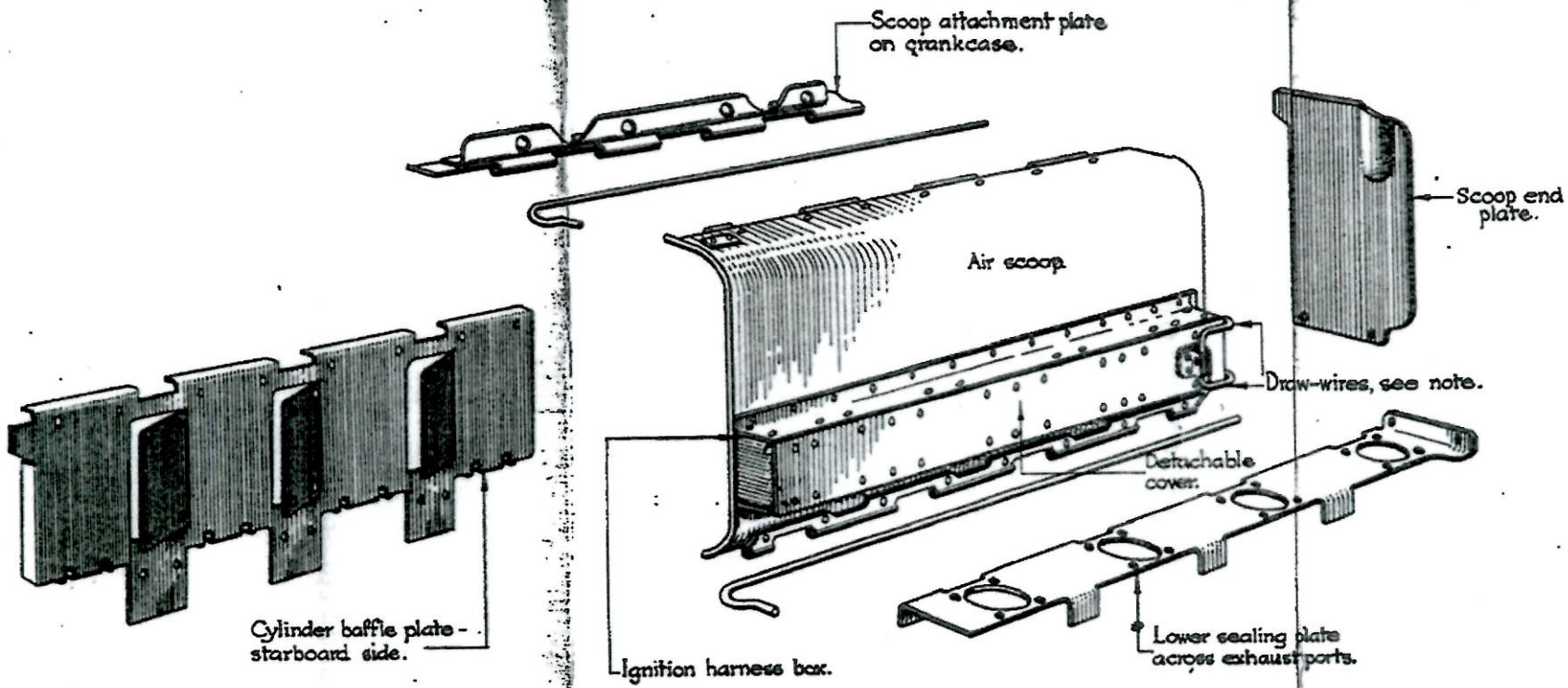

Note. When the engine is installed in Auster I. aeroplanes, these draw-wires are fitted from the forward end.

FIG. 16

COOLING BAFFLES

A.234

FIG. 16

PP1947 M23198/694 12/42 950 C&P Gp. 959 (4)

Propeller hub assembly

51. The propeller hub assembly (*see* fig. 17 of this Chapter) is designed to take a normal type of wood propeller, and mainly comprises the hub, hub sleeve, front plate, bolts and spinner. The hub is of steel and consists of a boss with a large diameter flange having eight bolt holes, the boss being bored to a taper and secured to the crankshaft by a key, nut and locking washer. On the forward face of the hub flange a friction disc is attached, whilst the rear face of the flange carries the engine timing disc which is secured by four wire-locked setscrews. As the boss of the hub does not extend the full length of the propeller hub, a flanged steel sleeve is provided which fits into the boss of the propeller, the flange picking up the bolt holes in the hub flange. The front plate is of duralumin and is provided with eight holes to suit the spigoted nuts of the eight steel propeller bolts, the bore of the plate passing over the steel sleeve. The spinner is carried by a dished steel plate which is assembled together with the front plate and secured by the eight propeller nuts. This plate carries a long stud and spring, the spinner being secured by a nut and split-pin on the forward end of the stud. The spring serves as a distance piece to support the nose of the spinner. The propeller nuts are locked, before assembling the spinner, by a dished plate which fits over the spinner stud and is secured to the spinner plate by bolts, the heads of which are spot-welded to the back of the spinner plate; the periphery of the locking plate bears against the flats of the nuts. The bolts are prevented from turning by a spigot on the rear face of the hub flange which bears against the flats on the bolt heads.

52. When removing the propeller for normal maintenance or replacement it is not necessary to remove the hub, the propeller being removed by withdrawing the spinner and front plate. When, however, it is necessary to remove the hub, a thread is provided on the forward side of the hub boss, to which an extractor can be attached.

Key to fig. 17

1. Spinner
2. Propeller nut locking plate
3. Spinner attachment plate
4. Propeller hub front plate
5. Propeller hub bolt
6. Propeller sleeve
7. Crankshaft plug
8. Propeller hub nut
9. Propeller hub key
10. Friction disc
11. Propeller hub
12. Timing plate
13. Crankshaft
14. Timing pointer
15. Camshaft driving pinion retaining nut
16. Thrust bearing and housing
17. Forward main bearing
18. Forward lifting eye
19. Crankpin oil seal
20. Crankshaft journal oil seal
21. Crankcase cover
22. Main oil gallery pipe
23. Rear slinging eye
24. Crankcase breather
25. Breather baffle
26. Magneto driving spindle pinion
27. Oil inlet connection
28. Oil pump
29. Magneto driving spindle
30. Magneto driving spindle oil seal
31. Magneto vernier coupling
32. Magneto mounting base
33. Magneto
34. Magneto contact breaker
35. Magneto distributor screening
36. Ignition lead connection
37. Rocker cover
38. Oil pump driving coupling
39. Camshaft journal
40. Camshaft
41. Tappet guide
42. Tappet
43. Push rod
44. Push rod cover
45. Exhaust valve rocker
46. Inlet valve rocker
47. Rocker bracket
48. Rocker cover clamping nut
49. Exhaust valve
50. Inlet valve
51. Inner valve spring
52. Outer valve spring
53. Valve guide
54. Cylinder head
55. Cylinder head joint washer
56. Cylinder barrel
57. Piston
58. Gudgeon pin
59. Cylinder flange sealing ring
60. Connecting rod
61. Crankcase
62. Camshaft driven pinion
63. Spindle—camshaft drive idler gear
64. Pinion—camshaft drive idler gear
65. Front cover
66. Camshaft driving pinion

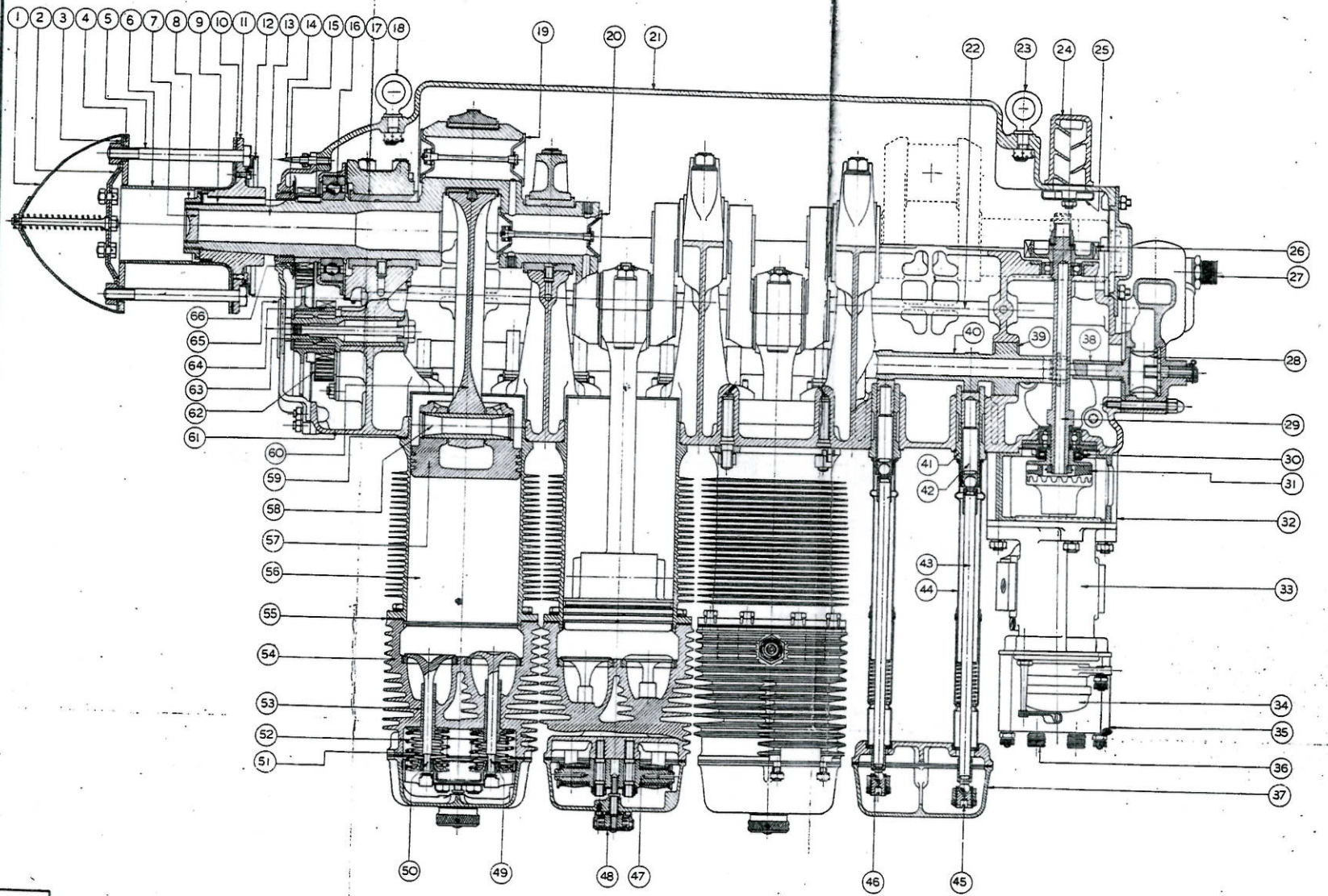

FIG. 17

LONGITUDINAL GENERAL ARRANGEMENT OF ENGINE

A235

FIG. 17

Key to fig. 18

1. Throttle control lever
2. Sparking plug
3. Throttle control connection rod
4. Power jet cam
5. Fuel pipe connection
6. Cylinder baffle
7. Carburetter
8. Push-rod cover
9. Mixture valve anchor plate (Auster I aeroplane only)
10. Fuel pump diaphragm vent and drain—starboard
11. Fuel pipe clip
12. Tappet
13. Camshaft
14. Air intake
15. Oil pressure pipe
16. Engine foot—starboard
17. Oil pump suction filter cap
18. Starboard magneto drive
19. Crankcase cover
20. Engine-speed indicator drive
21. Crankshaft main bearing cap
22. Port magneto drive
23. Crankshaft
24. Engine foot—port
25. Crankcase
26. Fuel pump
27. Fuel pump delivery pipe
28. Fuel pump diaphragm vent and drain—port
29. Fuel pump filter
30. Connecting rod
31. Cylinder barrel
32. Air scoop
33. Gudgeon pin
34. Piston
35. Ignition lead cover
36. Sparking plug
37. Exhaust pipe flange
38. Rocker cover
39. Rocker cover clamping nut
40. Rocker adjustable cup
41. Induction manifold

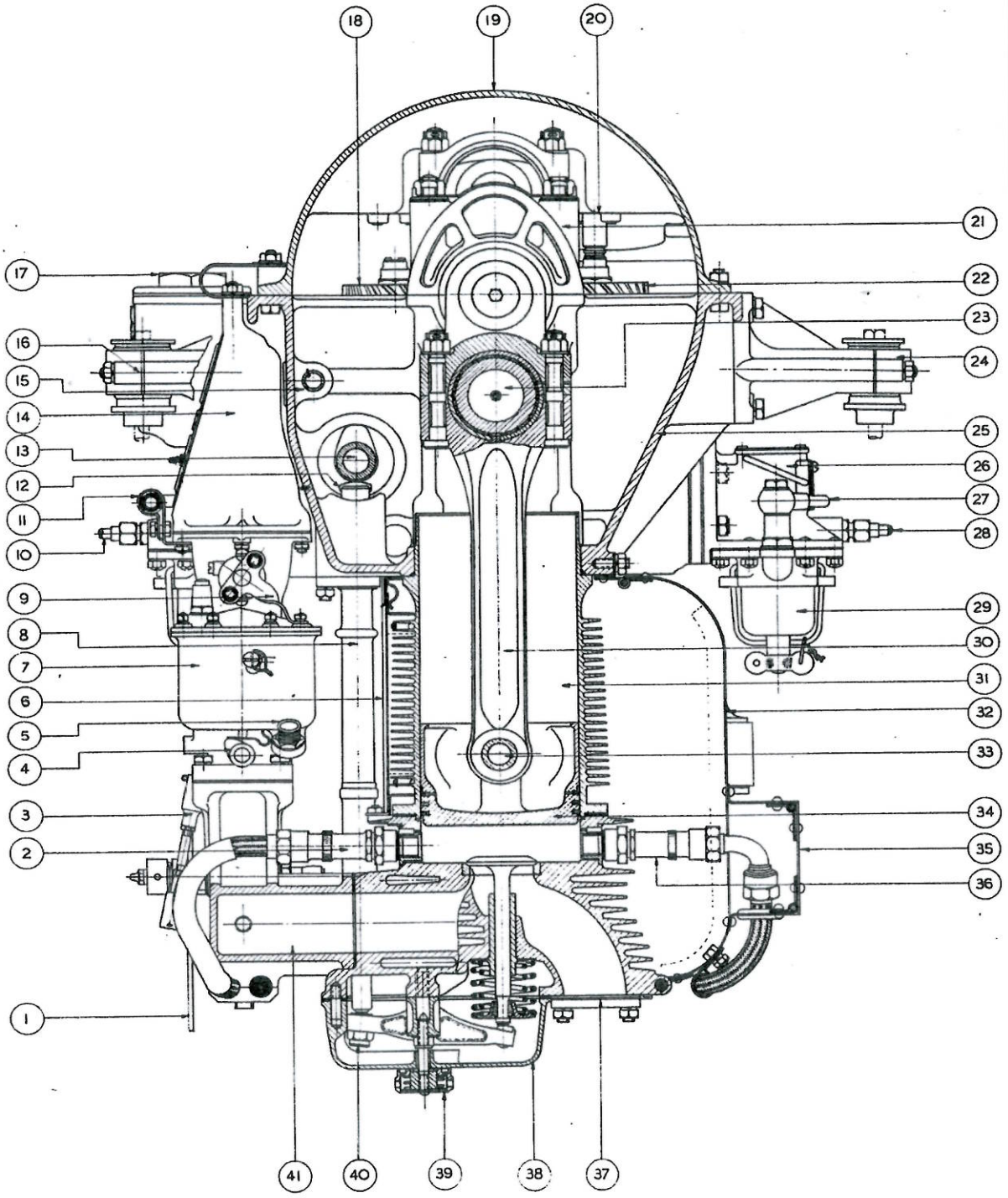

CROSS-SECTIONAL GENERAL ARRANGEMENT OF ENGINE (FROM FRONT)

FIG. 18

FIG. 18

A236

PP1947 M23190/694 12/42 950 C & P Gp. 959 (4)

Key to fig. 19

1. Magneto, starboard
2. Impulse starter coupling
3. Magneto mounting base, starboard
4. Fuel pump operating cam
5. Fuel pump operating tappet
6. Fuel pump, starboard
7. Delivery connection—pump to carburettor
8. Fuel pump rocker
9. Fuel pump tappet bearing plate
10. Oil pump drive coupling
11. Oil system pressure filter
12. Main oil gallery
13. Magneto driving spindle, starboard
14. Magneto driving spindle pinion, starboard
15. Magneto drive skew gear
16. Crankshaft
17. Breather
18. Engine-speed indicator drive adapter
19. Crankcase top cover
20. Magneto driving spindle pinion, port
21. Magneto driving spindle, port
22. Fuel pump priming lever
23. Fuel pump delivery pipe
24. Fuel pump, port
25. Magneto mounting base, port
26. Magneto vernier coupling
27. Magneto, port
28. Distributor cover screening, port
29. Contact breaker, port
30. Ignition control lever
31. Ignition control cam plate
32. Ignition control rod—contact breaker interconnecting
33. Contact breaker, starboard
34. Distributor cover screening, starboard
35. Ignition control rod—throttle lever to magneto lever

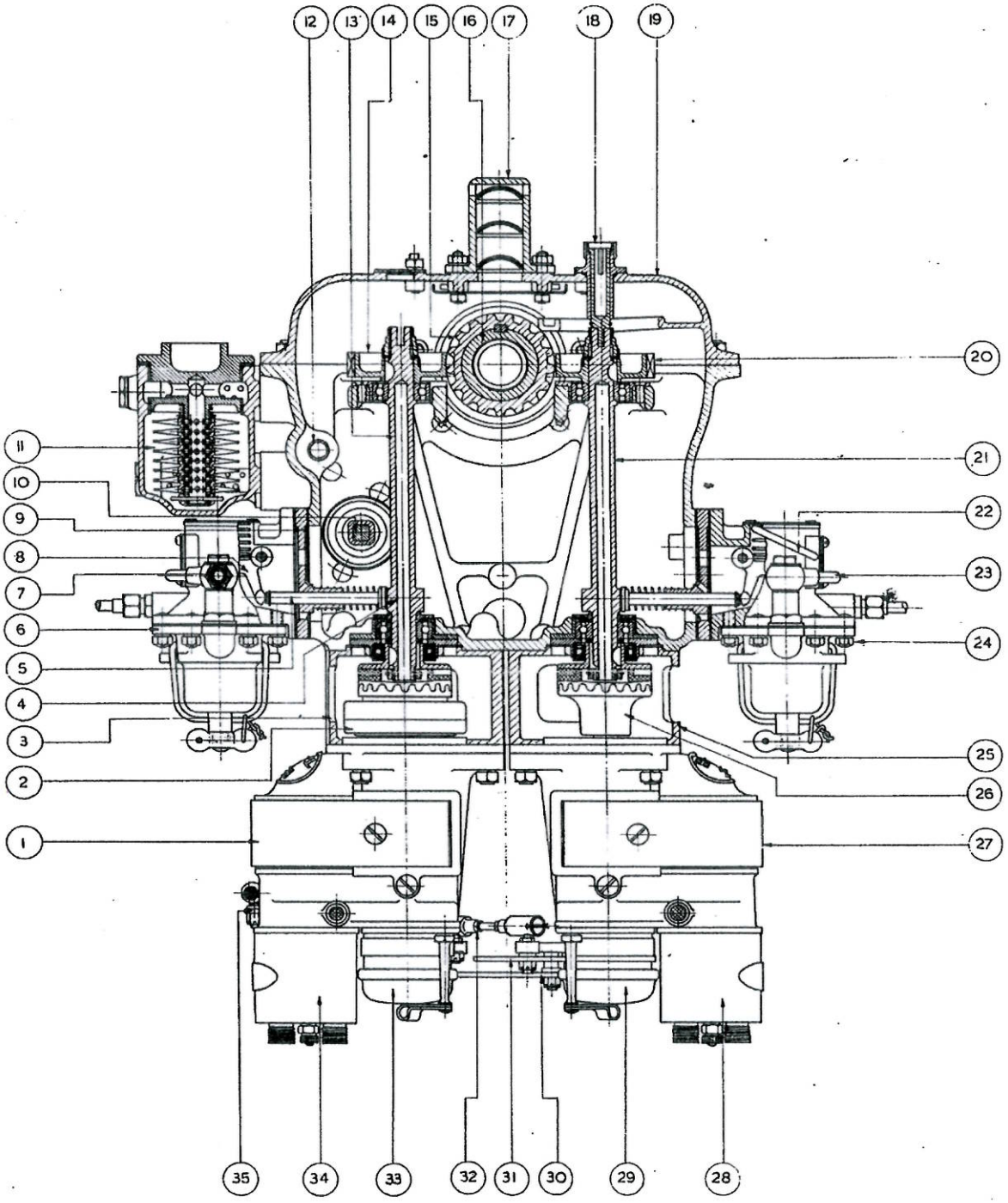

View from front of engine

CROSS-SECTIONAL ARRANGEMENT OF ENGINE (THROUGH MAGNETO DRIVES)

FIG. 19

A.237

FIG. 19