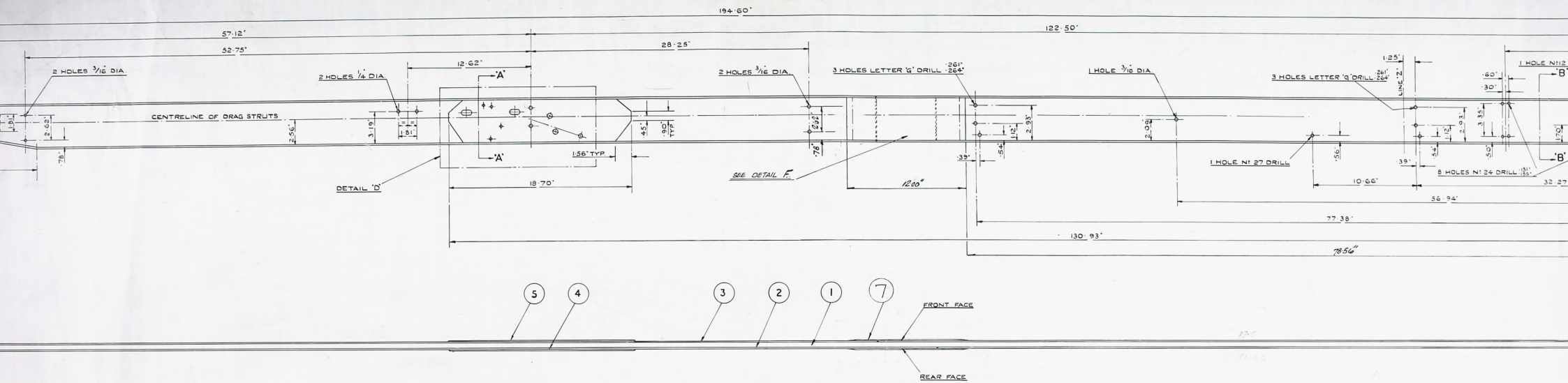

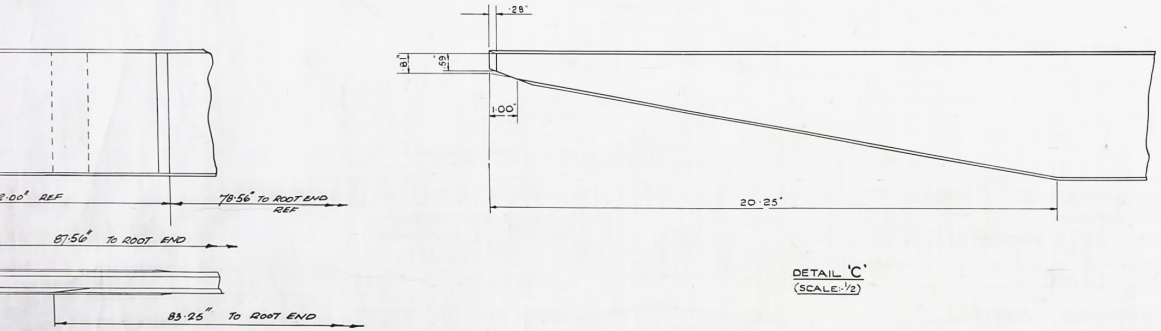

DETAIL 'C'
(SCALE :- 1/2)

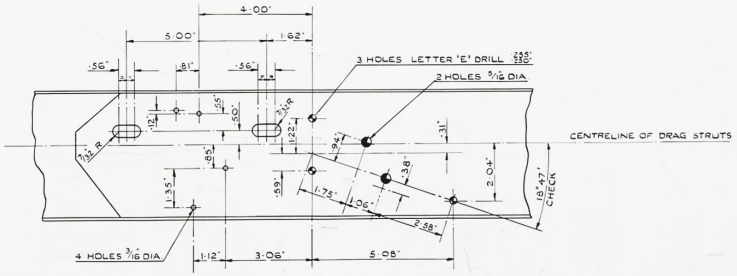

DETAIL 'D'
(SCALE :- 1/2)

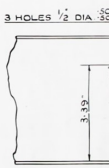

OWING SPLICING OF SPAR.
ECTION AS 'A-A'.

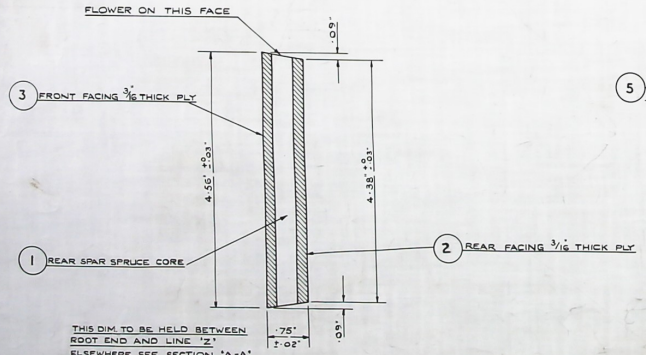

SECTION 'B-B'
(SCALE :- 1/1)

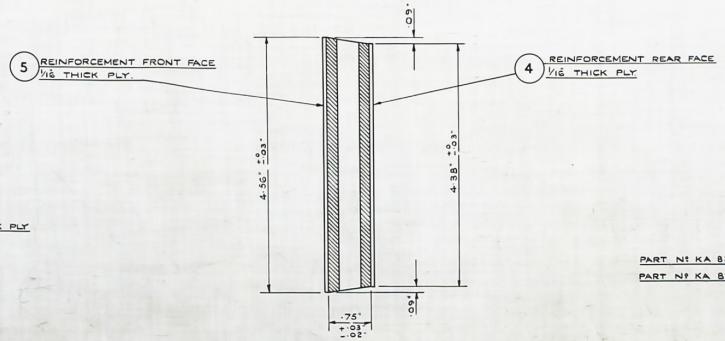

SECTION 'A-A'
(SCALE :- 1/1)

NOTES:-

1. SPAR MUST BE RIFT SAWN. ON NO ACCOUNT MUST THE ANGLE OF THE ANNUAL RINGS BE LESS THAN 45° TO THE BROAD SURFACE OF THE SPAR.
2. THE SPAR IS OF SANDWICH CONSTRUCTION, SPRUCE CORE ITEM 1 AND 3/16 THICK PLY FACINGS ITEMS 2 AND 3 GLUED UNDER PRESSURE.
3. USE GLUE ITEM 6, TYPE B70, SPEC. B.S. 1204, AS REQ'D.
4. THE 3/16 THICK PLY FACINGS ITEMS 2 AND 3 MAY BE SPLICED AT A POINT WITHIN 24·00" OF EITHER END OF THE SPAR. SUCH SPLICES ON THE FACES OF THE SPAR MUST NOT BE OPPOSITE EACH OTHER, BUT MUST BE STAGGERED APPROXIMATELY 3·00".
5. THE 1/16 THICK PLY REINFORCEMENTS ARE ATTACHED WITH GLUE UNDER PRESSURE.

PART No KA 82038/L, PORT, AS DRAWN.
PART No KA 82038/R, STARBOARD, OPPOSITE HAND.

This drawing is provided in accordance with original As-Built/Single Applicability for use with the initial enquirer/ shareh ONLY.

CORRECT APPLICATION TO THE AIRCRAFT IS THE RESPONSIBILITY OF THE ENQUIRER AND HIS ENGINEER AND NOT OF "AUSTER SPARES" OR LEICESTERSHIRE MUSEUMS.

Its supply does not confer any right to produce and trade in any of the components. Enquiries for these should be sent to:-

"Auster Spares", Carr Farm, Thorney, Newark, Notts., NG23 7DQ, England
Tel: (0452) 279817

PROTECTIVE TREATMENT —	ASSY. No	EKH 3 L/R SHT. 1	
	SCALE: 1/1, 1/2, 1/4		

AUSTER AIRCRAFT LTD

TITLE: SPAR, MAINPLANE, REAR

Shatter Resistant

MADE IN ENGLAND

E F G H J K L M N P Q R S T U V W X Y Z NOTE REFS. USED:-