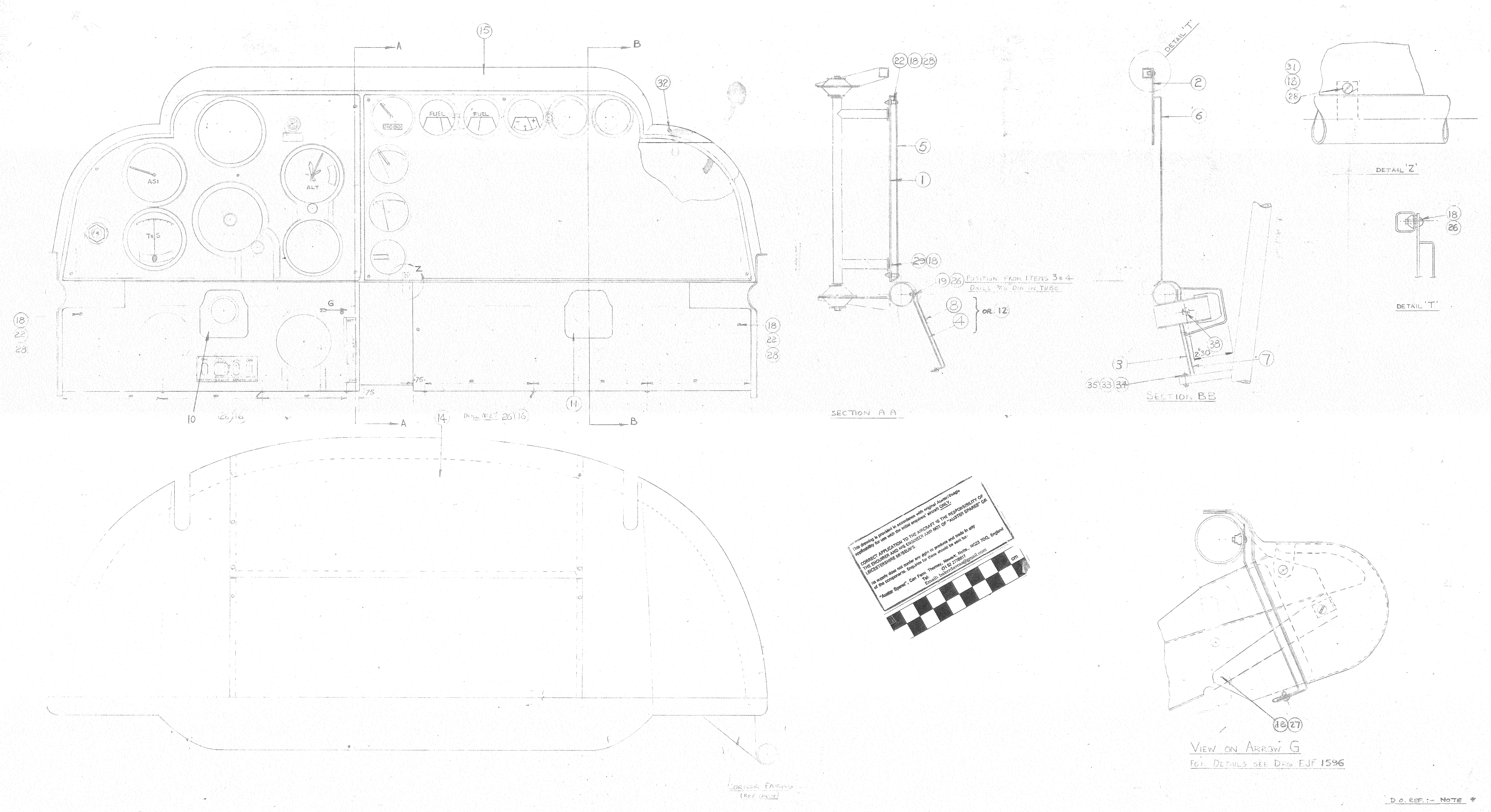

D.O. REF.:- NOTE *

ITEM 12 IS OPTIONAL TO ITEMS 4 & 8.

1 OFF PER AIRCRAFT

ITEM Nº	PART Nº	DESCRIPTION	MATERIAL OR DRG Nº	Nº OFF
50				
49				
48				
47				
46				
45				
44				
43				
42				
41				
40				
39				
38	AS4566-1-8	BOLT		4
37				
36				
35	A25-5-C	BOLT 2BA		2
34	SP 15C	WASHER 2BA		2
33	AGS 2002-C-3	NUT 2BA		2
32	A33-B-12	SCREW 4BA		1
31	SP 15B	WASHER 4BA		1
30				
29	A32-B-16	SCREW 4BA		4
28	A32-B-24	SCREW 4BA		16
27	A33-B-16	SCREW 4BA		2
26	A32-B-12	SCREW 4BA		17
25				
24				
23				
22	J702929	SPACER	AJG3103	15
21				
20				
19	4-120	RIVNUTS	UNREAD	9
18	TYPE 4	RAWLNUT 4BA	NATURAL RUBBER	23
17				
16	SNU0522	SPIRE CAPTIVE NUT		6
15	JA17315	CRASH ROLL ASSY	DJA 2633	1
14	JL704172	DECKING ASSY	EJG 3407	1
13				
* 12	JL704323	INST OF SWITCHES ON INST PANEL	CJG3440	1
11	J703216	FAIRING - CONTROL WHEEL HOUSING	CJG 3133	1
10	J703010	FAIRING - CONTROL WHEEL HOUSING	CJG 3113	1
9				
* 8	JA704113	COVER PANEL - PORT LOWER	DJG3099	1
7	J703218	COVER PANEL - STBD LOWER	DJG 3100	1
6	JA704033	COVER PANEL - STBD	DJG 3095	1
5	JA702947	COVER PANEL - B.F. INSTS.	DJG 3104	1
* 4	JA704163	MTG PANEL ASSY - PORT LOWER	DJG 3392	1
3	J703143	MTG PANEL - STBD LOWER	DJG 3140	1
2	JA704026	MTG. PANEL ASSY - STBD	EJG 3398	1
1	JA704082	MTG. PANEL ASSY - B.F. INSTS.	EJG3379	1

TYPE	PROTECTIVE TREATMENT	SCALE	ASSY Nº
A109	NONE	1/2	FJA2916

WELDING DATA

DRAWN: 4-7-62
CHECKED: 14-8-62
TRACED:
TRACING CHECKED:
STRESS APPROVAL:
DESIGN APPROVAL:
WEIGHT: EST'D / ACTUAL

AUSTER AIRCRAFT LIMITED. LEICESTER.

INSTLN OF INSTRUMENT PANEL (STD)

PART Nº JL 704083

DRG Nº FJG 3380

AMEND	A153	A136	A75	A88	A53	MOD Nº
	F	E	D	C	B	A	ISSUE