1. DO NOT SCALE DRAWING
2. ENGLISH PROJECTION IS USED UNLESS OTHERWISE STATED.
3. TOLERANCES ON DIMENSIONS ARE + OR −·01" UNLESS OTHERWISE STATED.
4. IF IN DOUBT ABOUT THIS DRAWING, RING DRAWING OFFICE BEFORE COMMENCING OPERATIONS

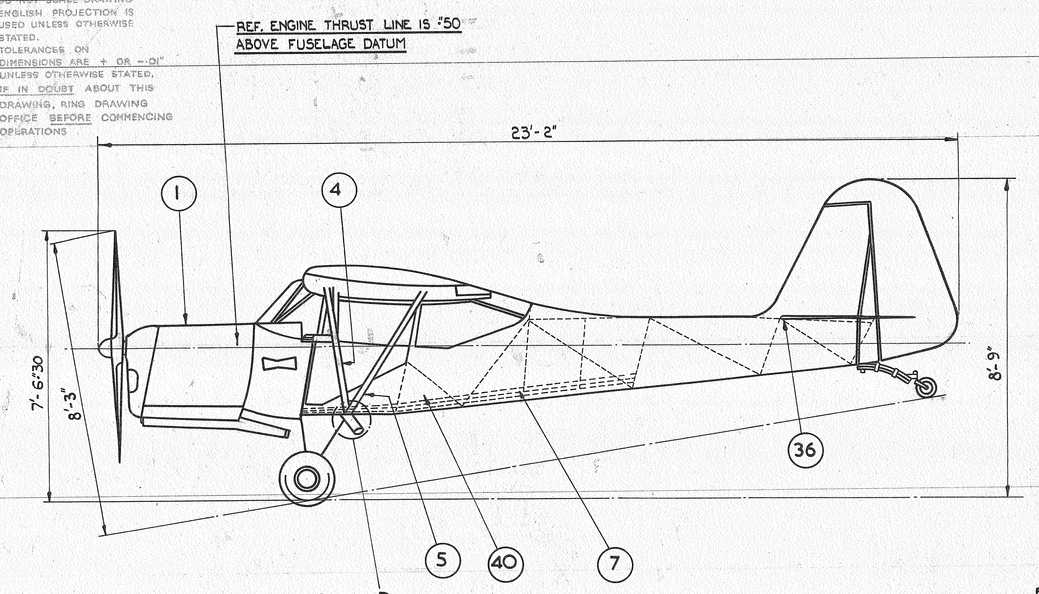

DETAIL D

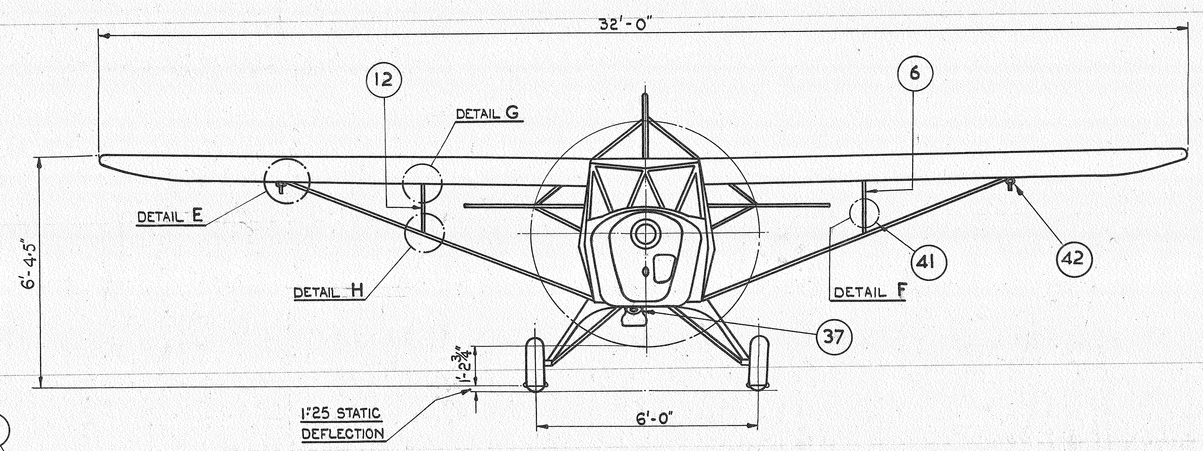

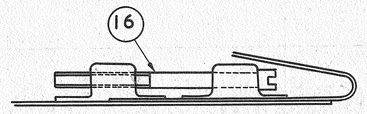

DETAIL C

WHEN ASSEMBLING WING BANDS, IT IS NECESSARY TO FORM THE TRAILING EDGE FIRST, MAKING SURE THAT, AFTER BENDING, THE HOLE IN THE BAND IS IN ALIGNMENT WITH THE CLAMPS, THIS IS ESSENTIAL IN ORDER TO BE ABLE TO INSERT A SCREWDRIVER FOR TIGHTENING THE ADJUSTING SCREW, ITEM 16

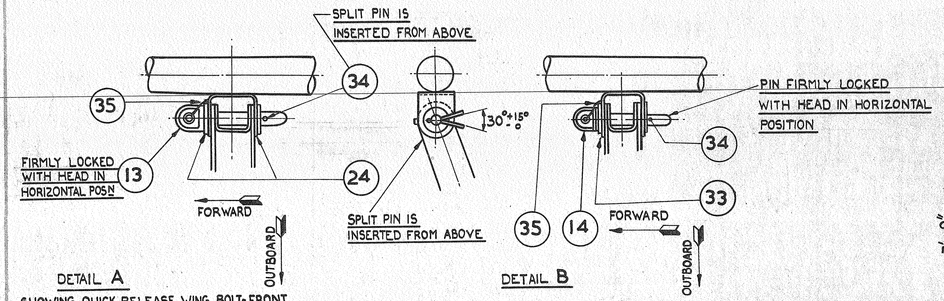

DETAIL A
SHOWING QUICK RELEASE WING BOLT-FRONT

DETAIL B
SHOWING QUICK RELEASE WING BOLT-REAR

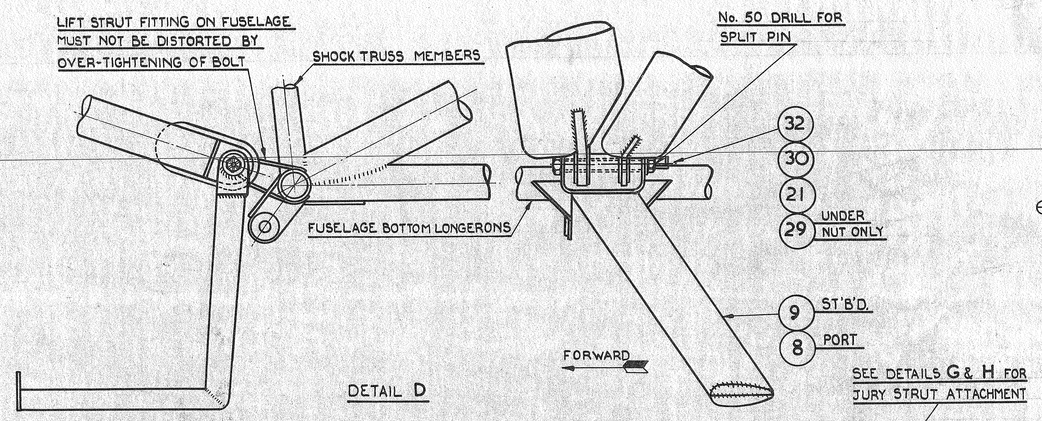

DETAIL D

SEE DETAILS G & H FOR JURY STRUT ATTACHMENT

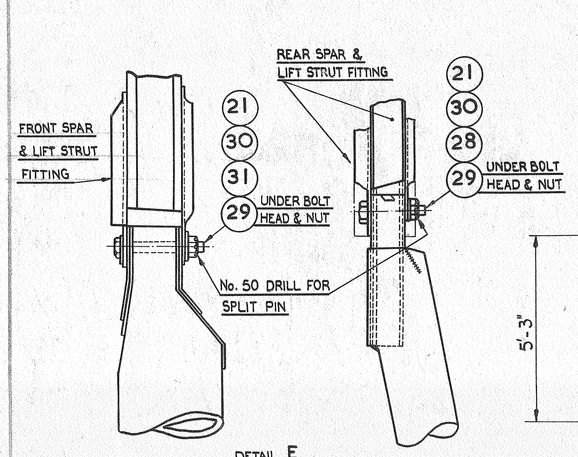

DETAIL E
LIFT STRUT FITTINGS ON SPARS MUST NOT BE DISTORTED BY OVER-TIGHTENING OF BOLTS

DETAIL G

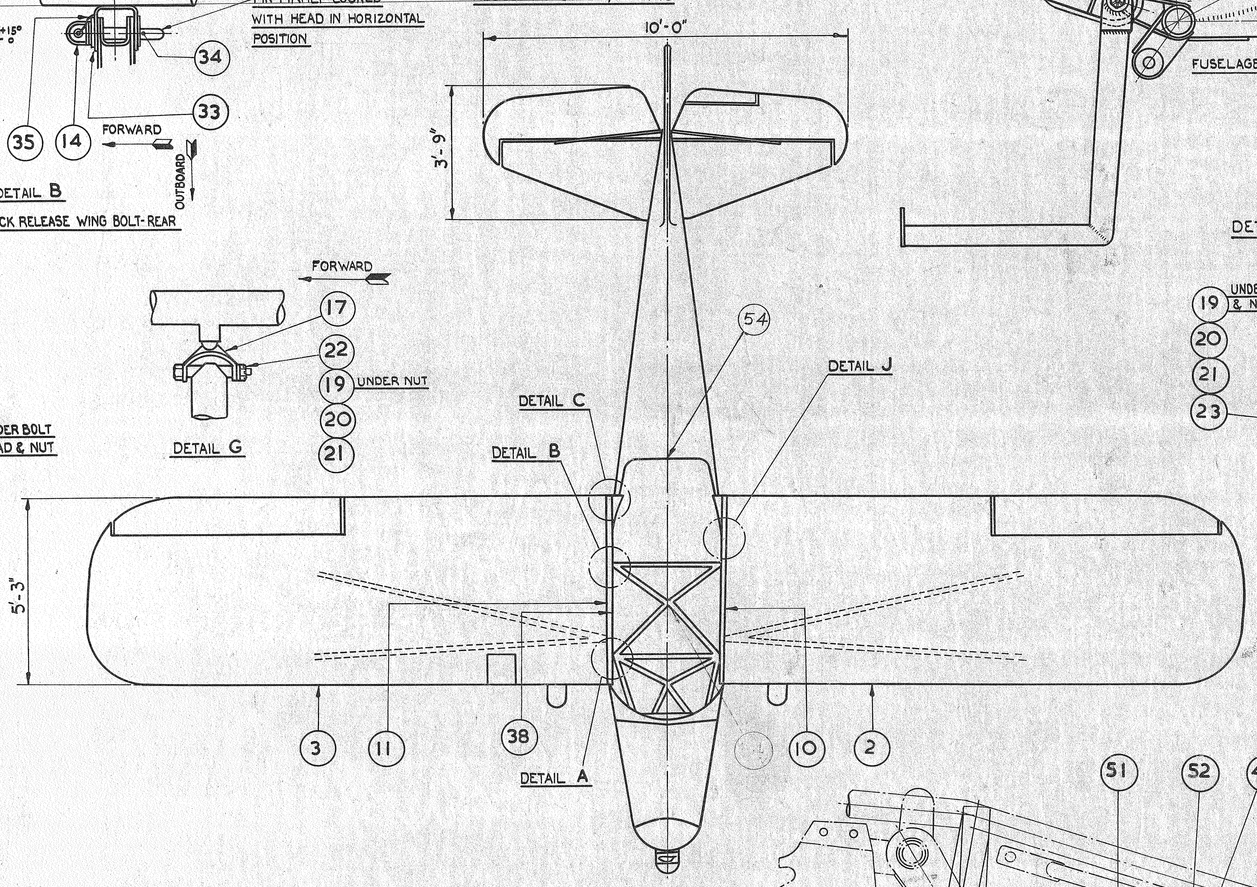

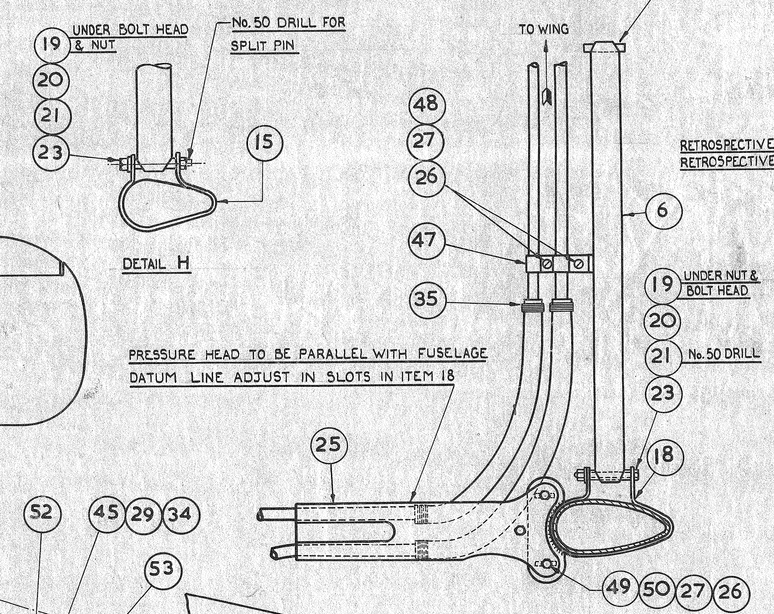

DETAIL H

RETROSPECTIVE
RETROSPECTIVE

PRESSURE HEAD TO BE PARALLEL WITH FUSELAGE DATUM LINE ADJUST IN SLOTS IN ITEM 18

DETAIL F
SHOWING LINE CONNECTIONS FOR PITOT HEAD TO WING

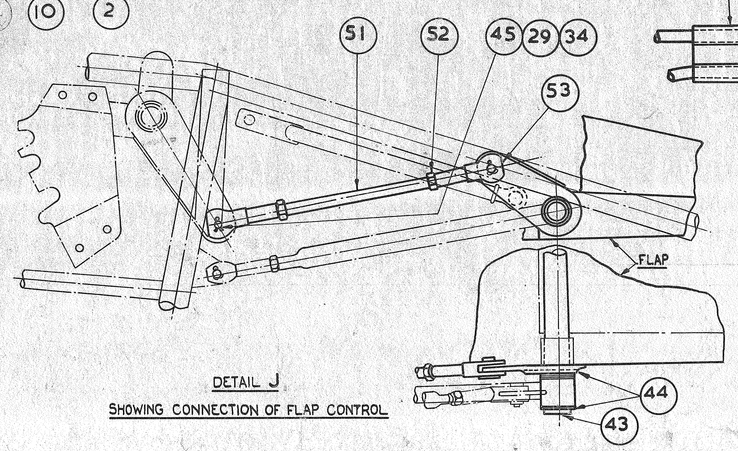

DETAIL J
SHOWING CONNECTION OF FLAP CONTROL

GENERAL NOTES:			
DIAGRAMS & CHARTS	DRG. No's.	PART No's	WHENEVER BOSTIK IS USED ON THE AIRCRAFT, IT IS TO BE APPLIED IN ACCORDANCE WITH THE BOSTIK INSTRUCTION SHEET. No. SK. 277. ALL DIMENSIONS ON THIS DRG. ARE REFERENCE ONLY. ⊕ SPECIAL ORDER ONLY.
LUBRICATION DIAGRAM			
FUEL & OIL DIAGRAM } SEE HANDBOOK			
BONDING DIAGRAM			
STENCILING DIAGRAM			
RIGGING DIAGRAM	DJ 97		
WIRING DIAGRAM	FJ 87		

ISSUE	MOD. No	INTERNAL MOD. No	INTERNAL CLASS	APP.	R.T.O.
BU	MOD. 4073				
BT	CIVIL MOD 3327 ISS. 2				
BS	CIVIL MOD 3245				
BR	CIVIL AMEND 3141			R.E.B.	
	REDRAWN				

TYPE: CIVIL A/C J5F

This drawing is provided in accordance with original Auster/Beagle applicability for use with the initial enquirers' aircraft ONLY.

CORRECT APPLICATION TO THE AIRCRAFT IS THE RESPONSIBILITY OF THE ENQUIRER AND HIS ENGINEER AND NOT OF "AUSTER SPARES" OR LEICESTERSHIRE MUSEUMS.

Its supply does not confer any right to produce and trade in any of the components. Enquiries for these should be sent to:-

"Auster Spares", Carr Farm, Thorney, Newark, Notts., NG23 7DQ, England
Tel: 01522 778817
Email: bakerdavcaa@gmail.com

cm

⊕					
	57	SEE DRG.	S.O.O. MODS.	EJ 128	–
	56				
	55				
	54	JL 70M 833	INST OF CG DATA CARD & HOLDER	CJG 3580	1
	53	SP3/415	FORK JOINT		4
	52	J 2939	THIN NUT	AJB 239	4
	51	G 2095	CONNECTING ROD - FLAP	AGB 58	2
	50	J 11171	DISTANCE PIECE	AJA 96	2
	49	A25/6B	BOLT 4 B.A. HEX.		
	48	A32/812	SCREW		2
	47	D 648	CLIP	ADF 83	1
	46				
	45	SP4/E9	STEEL PIN		4
	44	G 2162	SPECIAL WASHER	AGB 57	4
	43	SP3/E10	SPLIT PIN		2
	42	DA 92	PICKETING RING	ADJ 9	2
	41	DA 9013	PRESSURE HD. COVER	CDJ 10	1
	40	JA 9378	TOOL KIT (GIPSY MAJOR)	AJJ 104	1
	39				
	38	JL 77367/R	INSTN OF FUEL GAUGE FUNNEL	AJG 1810	1
	37	JL 51203	INSTN SHOCK CORD CHECK CABLE PATCH	AJE 340	1
	36	JL 14846	INSTN TAIL PLANE SAFETY TUBE	CJA 1535	1
	35		LOCKING WIRE		AS REQ'D.
	34	SP3/E6	SPLIT PIN		8
	33	SP14/E	WASHER		4
	32	A25/23G	BOLT		2
	31	A25/19G	BOLT		2
	30	A27/G5	SLOTTED NUT		6
	29	SP14/G	WASHER		14
	28	A25/11G	BOLT		2
	27	A27/6P	NUT 4 B.A. PLAIN		4
	26	SP47/B	WASHER 4 B.A. SPRING		4
	25	JA 81537	PRESSURE HEAD ASSY. MK IV	AJL 58	1
	24	SP14/J	WASHER		4
	23	A25/13C	BOLT		2
	22	A25/14C	BOLT		2
	21	SP3/C8	SPLIT PIN		10
	20	A27/C5	SLOTTED NUT		4
	19	SP14/C	WASHER		6
	18	JA 81535	CLIP ASSY.	AJL 56	1
	17	AA 819	ADJUSTING PLUG	ADL 11	2
	16	DA 7074	ADJUSTING SCREW	ADL 16	2
	15	A 892	JURY STRUT CLAMP	ADL 53	1
	14	G 10206	EYEBOLT REAR	CGA 299	2
	13	J 14240	EYEBOLT FRONT	CJA 1330	2
	12	JA 81458/R	JURY STRUT	CJL 45/R	1
	11	BA 7011/R	WING BAND ST'B'D.	CDL 13/R	1
	10	BA 7011/L	WING BAND PORT	CDL 13/L	1
	9	JA 81527/R	FOOTSTEP ST'B'D.	CJL 53/R	1
	8	JA 81527/L	FOOTSTEP PORT	CJL 53/L	1
	7	JL 2779	G.A. OF FLYING CONTROLS	EJB 143	1
	6	JA 81458/L	JURY STRUT ASSY.	CJL 43/L	1
	5	JA 81412	REAR LIFT STRUT	CJL 42	2
	4	JA 81411	FRONT LIFT STRUT	CJL 41	2
	3	JA 81461/R	G.A. OF WING ST'B'D.	EJH 374/R	1
	2	JA 81461/L	G.A. OF WING PORT	EJH 374/L	1
	1	JA 14239	FINAL FUSELAGE ASSY.	FJA 1329	1
	ITEM No	PART No	DESCRIPTION	MATERIAL OR DRG. No	No OFF

PROTECTIVE TREATMENT | ASSY. No | SCALE: | DRAWN B.T. | CHECKED J.V.T. | TRACED M.M.C. | TRACING CHECKED B.T.

AUSTER AIRCRAFT LTD REARSBY, LEICESTER. | STRESS APPROVAL E.V.H. | DESIGN APPROVAL R.E.B. | APPROVED R.T.O. | PART No JL 0175

TITLE: THREE VIEW G.A. | DRG. No EJ 96