DRWG. Nº E.E.A.22
PART Nº EA.10063

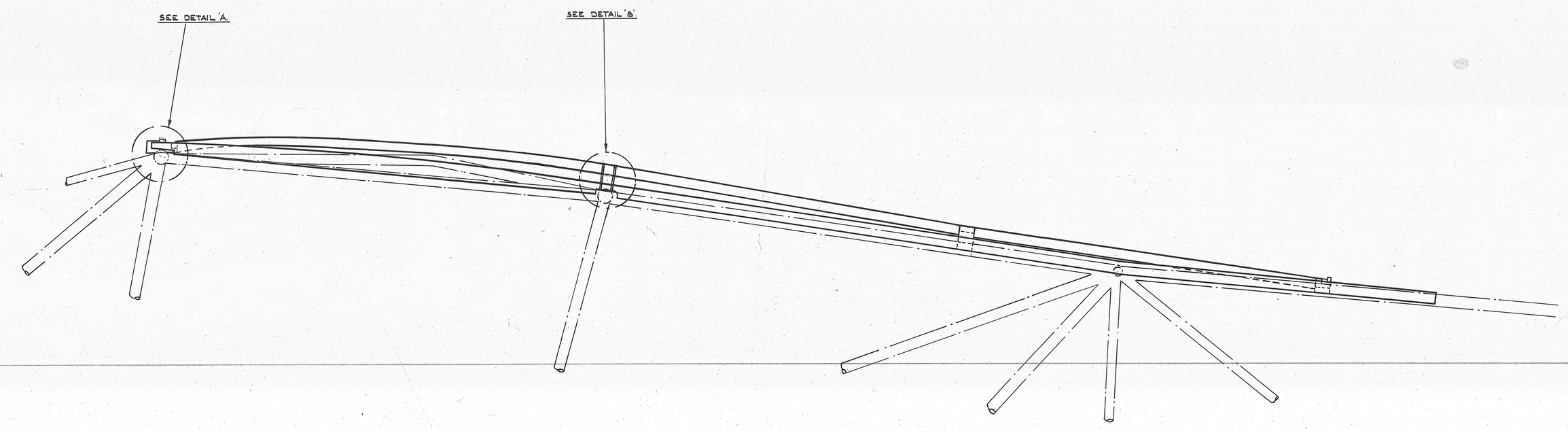

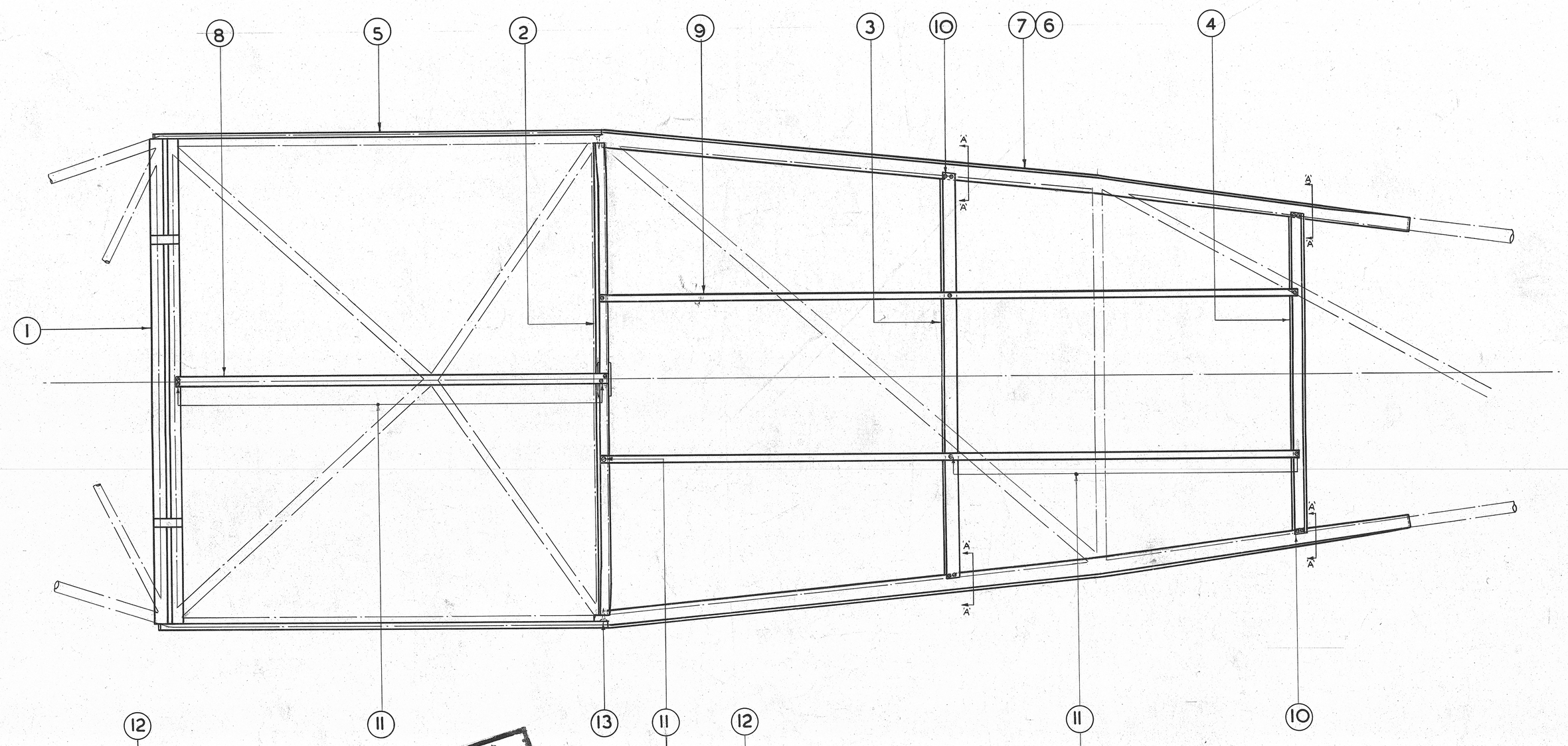

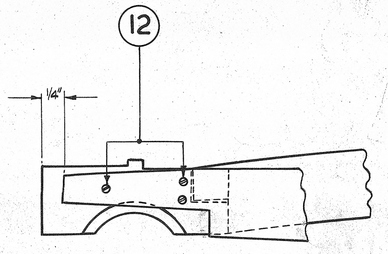

ENLARGED VIEW OF DETAIL 'A'.

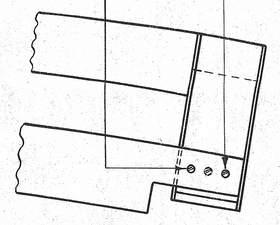

ENLARGED VIEW OF DETAIL 'B'.

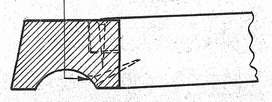

SECTION 'A'-'A'
PORT SIDE SHOWN.

This drawing is provided in accordance with original Auster/Beagle applicability for use with the initial enquirers' aircraft ONLY.

CORRECT APPLICATION TO THE AIRCRAFT IS THE RESPONSIBILITY OF THE ENQUIRER AND HIS ENGINEER AND NOT OF "AUSTER SPARES" OR LEICESTERSHIRE MUSEUM'S.

Its supply does not confer any right to produce and trade in any of the components. Enquiries for these should be sent to:-
"Auster Spares", Carr Farm, Thorney, Newark, Notts., NG23 7DQ, England
Tel: 01 62 2778817
Email: bakerdaveas@gmail.com
cm

2.	AM91	664	4		
1.	MOD.70		3.	J.H.P.	
~~A~~.					
ISSUE	MOD. Nº	INTERNAL MOD Nº	CLASS	APP.	R.T.O.

TYPE:~ AUSTER

PART Nº	ITEM Nº	DESCRIPTION.	MATERIAL OR DRWG Nº	Nº OFF.
AGS 250/25	13.	WOODSCREW. Nº4	[illegible]	2.
AGS 250/7	12.	WOODSCREW. Nº2.	[illegible]	8.
AGS 250/5	11.	WOODSCREW. Nº2	[illegible]	16.
AGS 250/4	10.	WOODSCREW. Nº2	[illegible]	8.
E10081	9.	FORMER.	A.E.A.129.	2.
E10080	8.	CENTRE FORMER.	C.E.A.128.	1.
E10079	7.	ST'B'D REAR OUTER FAIRING FORMER.	C.E.A.109.	1.
E10078	6.	PORT REAR OUTER FAIRING FORMER.	C.E.A.108.	1.
D.7166	5.	OUTER FAIRING FORMER.	A.D.A.210.	2.
E.10077	4.	REAR CROSS MEMBER.	C.E.A.106.	1.
E10076	3.	CROSS MEMBER.	C.E.A.126.	1.
EA10075	2.	CROSS MEMBER.	D.E.A.125.	1.
E10074	1.	FRONT CROSS MEMBER.	C.E.A.124.	1.

PROTECTIVE TREATMENT.	ASSY. Nº	E.E.A.25.		
	SCALE:~ 1/4 FULL SIZE.			

DRAWN BY:~ H.F. MARKHAM. 1.4.43. | CHECKED BY:~ R.C. TAYLOR. 1.4.43. | TRACED BY:~ M.J. LANDER. 23.6.43.

TAYLORCRAFT AEROPLANES (ENGLAND) LTD. LEICESTER.

STRESS H.A. CARLESS APPROVAL. 1.4.43.
DESIGN APPROVAL.
APPROVED R.T.O.

PART Nº EA.10063.

TITLE:~ CABIN TOP FRAME ASSEMBLY.

DRWG Nº E.E.A.22.

TRACING CHECKED BY:~ [illegible] 5.7.43.