1. DO NOT SCALE DRAWING
2. ENGLISH PROJECTION IS USED UNLESS OTHERWISE STATED
3. TOLERANCES ON DIMENSIONS ARE + OR – 0.10" UNLESS OTHERWISE STATED
4. IF IN DOUBT ABOUT THIS DRAWING RING DRAWING OFFICE BEFORE COMMENCING OPERATIONS

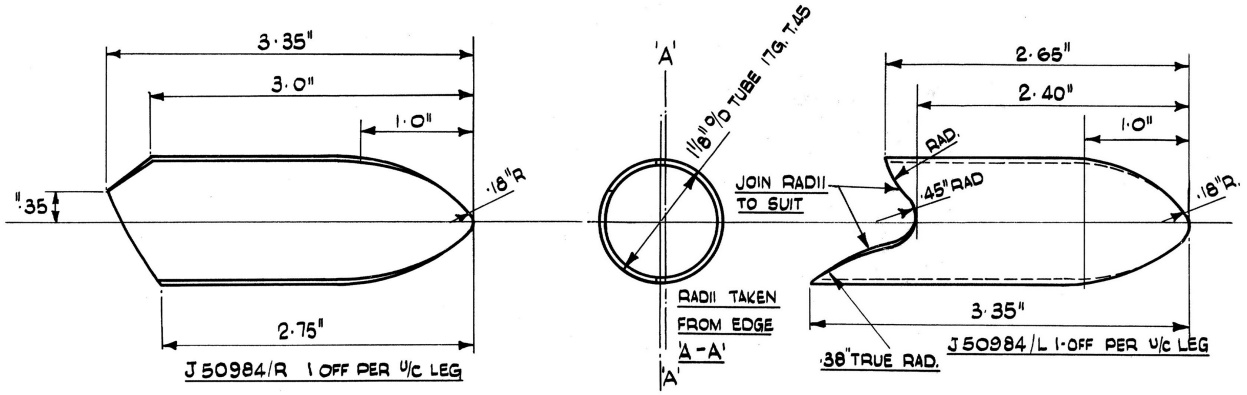

PART No. J50984 L/R DRG. No. CJE. 257/1 L/R ST'BD U/C

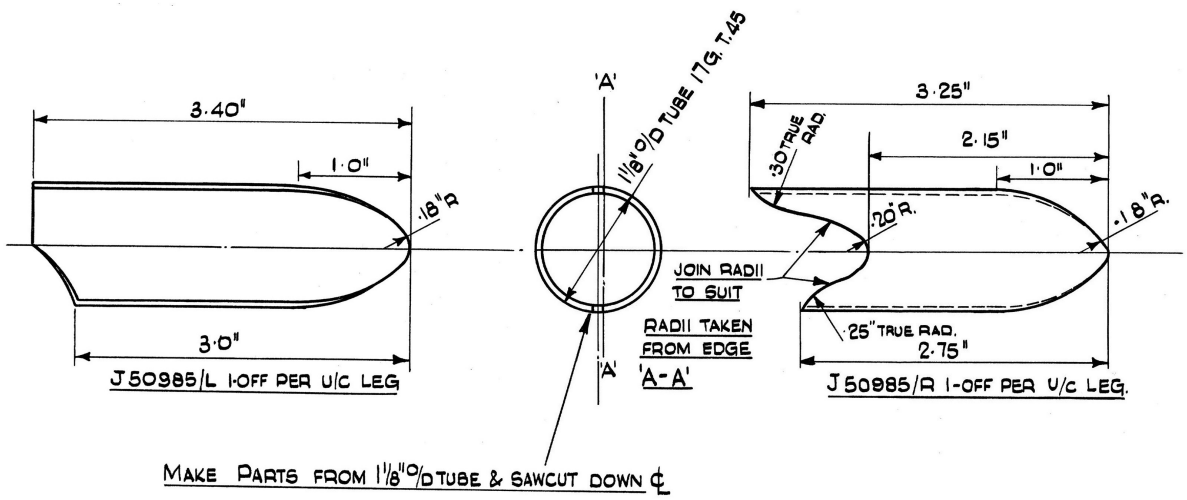

DIMS NS. ARE APPROXIMATE. PARTS MUST BE FILED TO SUIT U/C LEG & RAD. ROD ON ASSY.

PART No. J50985 L/R DRG. No. CJE. 257/2 L/R PORT U/C

					6				
					5				
					4				
					3				
					2				
PROTECTIVE TREATMENT	ASSY. NO.	EJE 22	EGE 4		1		1 1/8"O/D X 17G TUBE	T. 45	
		CSK 2157			ITEM NO.	PART NO.	DESCRIPTION	MATERIAL OR DRG. NO.	NO. OFF
	SCALE: 1/1				DRAWN		CHECKED	TRACED	
AUSTER AIRCRAFT LTD. LEICESTER							STRESS	PART NO. SEE ABOVE	
TITLE: SLEEVE								DRG. NO. CJE 257 1/2	

ISSUE	MOD. NO.	INTERNAL MOD. NO.	INTERNAL CLASS	APP	RTO
2	DIGITISED				
1	AM 300	182B			

TYPE: AUSTER