KH23
PART Nº K80435

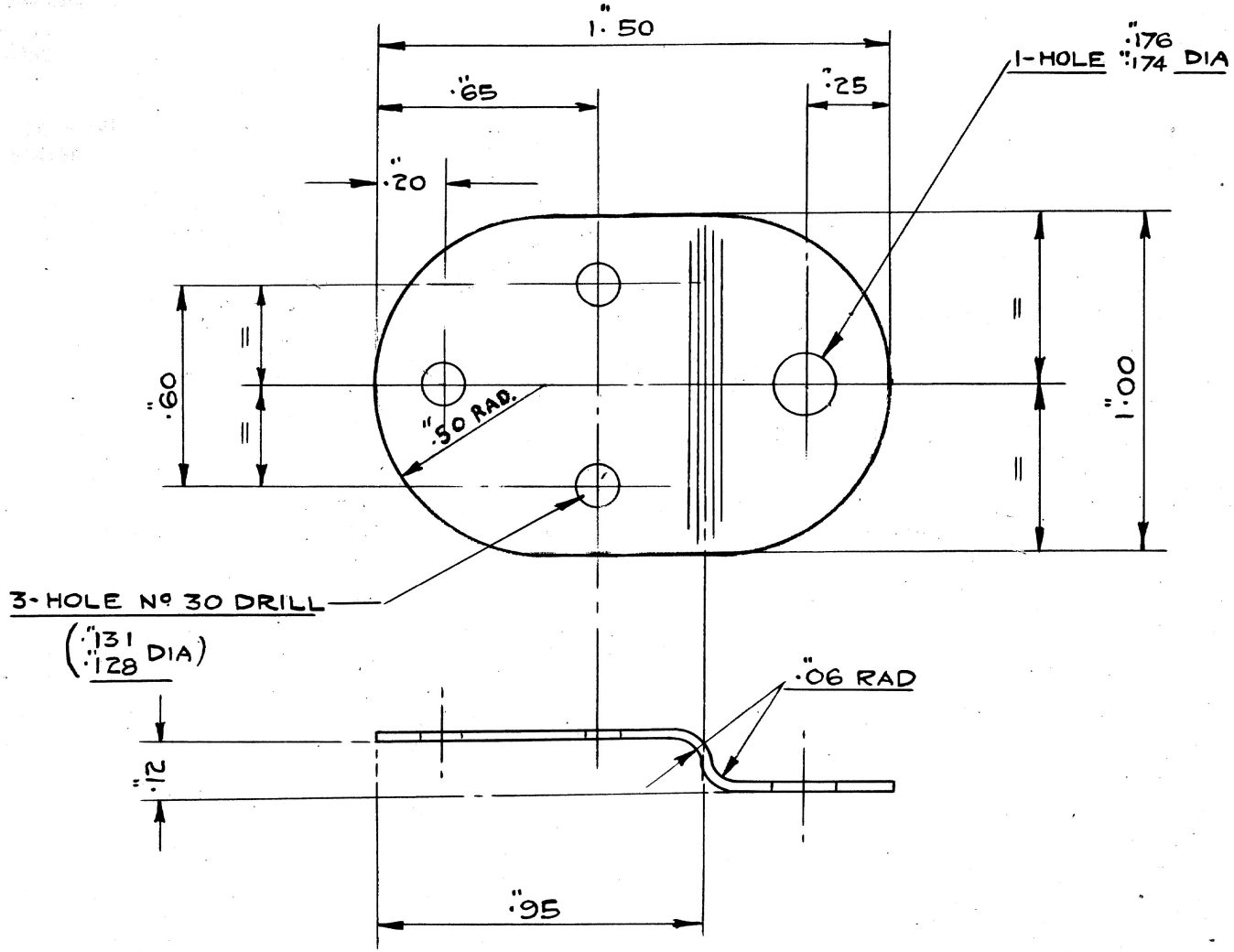

2	AM 300	1872				AJG 805	AJH148 AJH149	PLATE 20 S.W.G.	S.3.	1
~~1~~	155	1319	4B.	AHT	AKH 15	AKH 25	CJB 153			
~~A~~						2/1				

J.E.T 30.1.45 G.S. P.T.O. K80435

M.E.S.

KH 23

F.L.C.

TYPE AUSTER TITLE STRAP BRACKET